深 圳 金 亚 太 科 技 有 限 公 司

Shenzhen Geniatech Co.,Ltd.

SPECIFICATION

MODEL:MPD3588

APPROVED BY GENIATECH		
PREPARED BY 编写	**CHECKED BY** 审核	**APPROVED BY** 批准

Please return the origional copy after approved by your company with seal and signature.
请在贵公司盖章并签字后寄回正本一份。

APPROVED BY CUSTOMER		
COMMENTS 确认意见	**APPROVED BY** 批准签字	**COMPANY SEAL** 盖章

CONTENT

1.GENERAL DESCRIPTION.....1

2.PRODUCT PICTURE..... 1~2

3.FEATURES..... .4

4. Support FORMATS..... ...4

5. PRECAUTIONS FOR USE 5

Revision History

VERSION	DATE	BOARD ID	PAGE	DESCRIPTION	AUTHOR
V1.0	2025/11/20				

1. GENERAL DESCRIPTION

MPD3588 is a multi-display box designed based on RK3588 processor with rich peripheral resources and complete interfaces, equipped with an octa-core 64-bit CPU, main frequency up to 2.4GHz, integrated ARM Mali-G610 MP4 quad-core GPU, built-in AI accelerator NPU, can provide 6TOPs of computing power.It supports multiple HDMI outputs, supporting split output across multiple screens and heterogeneous display on multiple screens. Suitable for multimedia advertising machine and other scenes.. It is fully functional and convenient:

(I) Support 4 x HDMI Out and 1 x HDMI Input, support 8K video editing and decoding.

(II) Supports LPDDR up to 32GB and EMMC up to 512GB(Default is 4GB RAM and 32GB ROM).

(III) Support Type-C/Earphone/USB3.0/USB2.0/GPIO/CAN/RS485/RS232/TTL peripheral interfaces.

(IV) Support M.2/I2C/UART/USB2.0 and other internal expansion

(V) Support Dual Gigabit wired network port with optional POE power supply, and at the same time can support 2.4G/5G dual-band wifi and Bluetooth.

(VI) Support multiple operating systems: Android14

(VII) Built-in watchdog and RTC battery can support 7*24 hours stable operation.

2. PRODUCT PICTURE

Below pictures are for reference only, please prevail in kind.

IR
POWER
SIM
MICRO SD
EARPHONE
USB 3.0
USB 3.0
LED

DC 12V
HDMI IN
HDMI 1
HDMI 2
HDMI 3
HDMI 4
TYPE C
LAN 1
LAN 2
5V
5V
3V3
3V3
GND
RS232
RX1 TX1
GND
RS232
RX2 TX2
RECOVERY
RESET
GND
B
A
RS485

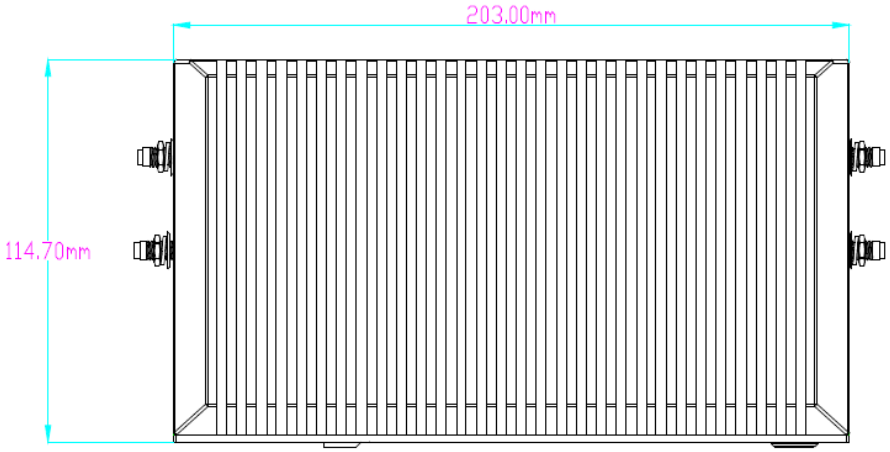
203.00mm
114.70mm

44.10mm
50.10mm

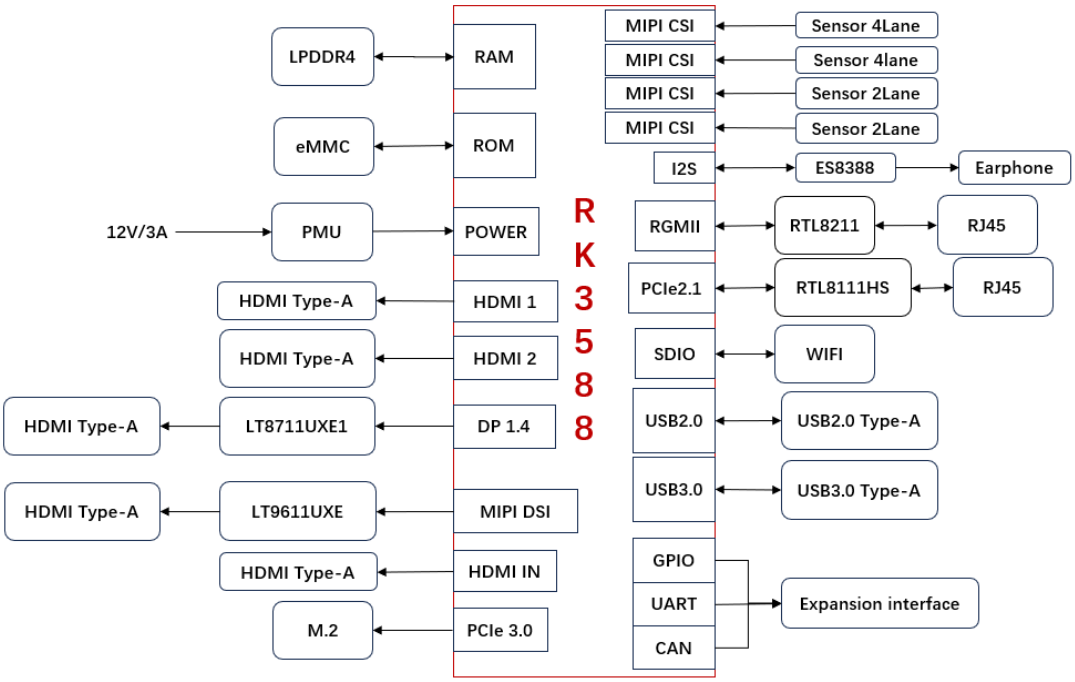
LPDDR4
RAM
eMMC
ROM
12V/3A
PMU
POWER
HDMI Type-A
HDMI 1
HDMI Type-A
HDMI 2
HDMI Type-A
LT8711UXE1
DP 1.4
HDMI Type-A
LT9611UXE
MIPI DSI
HDMI Type-A
HDMI IN
M.2
PCIe 3.0
RK3588
MIPI CSI
Sensor 4Lane
MIPI CSI
Sensor 4lane
MIPI CSI
Sensor 2Lane
MIPI CSI
Sensor 2Lane
I2S
ES8388
Earphone
RGMII
RTL8211
RJ45
PCIe2.1
RTL8111HS
RJ45
SDIO
WIFI
USB2.0
USB2.0 Type-A
USB3.0
USB3.0 Type-A
GPIO
UART
CAN
Expansion interface

3.FEATURES

CPU	Rockchip RK3588, Quad-core Cortex-A76 and Quad-core Cortex-A55
GPU	Mali-G610 MP4 (4x256KB L2 Cache)
RAM	4GB LPDDR4(8/16/32GB optional)
ROM	32GB EMMC(64GB/128GB/256GB optional)
Network	2x1000M Ethernet / 2x2 MIMO 2.4GHz/5GHz 802.11 a/b/g/n/ac/ax / BT5.2 or above
I/O	USB3.0 x 1/USB2.0 x 1/Type-C/HDMI OUT x 4/HDMI IN x 1/ TF Slot/RS-232 x 2/RS-485/CAN/GPIO x 4/IR IN
OS	Android 14
Power	Adapter 12V/2A
Appearance	203 mm *114.7 mm *50.1mm
Environment	0℃~ +50℃

4.Support Formats

Video Decoder

- Real-time video decoder of MPEG-1, MPEG-2, MPEG-4, H.263, H.264, H.265, VC-1, VP9, VP8, MVC, AV1
- MMU Embedded
- Multi-channel decoder in parallel for less resolution
- H.264 AVC/MVC Main10 L6.0 :8K@30fps (7680x4320)
- VP9 Profile0/2 L6.1 :8K@60fps (7680x4320)
- H.265 HEVC/MVC Main10 L6.1 :8K@60fps (7680x4320)

- AVS2 Profile0/2 L10.2.6 :8K@60fps (7680x4320)
- AV1 Main Profile 8/10bit L5.3 :4K@60fps (3840x2160)
- MPEG-2 up to MP :1080p@60fps (1920x1088)
- MPEG-1 up to MP :1080p@60fps (1920x1088)
- VC-1 up to AP level 3 :1080p@60fps (1920x1088)
- VP8 version2 :1080p@60fps (1920x1088)

Video Encoder

- Real-time H.265/H.264 video encoding
- Support up to 8K@30fps
- Multi-channel encoder in parallel for less resolution

5.Precautions for use

1.Storage temperature: -20℃～+70℃

2.Do not squeeze、distort or disassemble the PC.

3.Keep the Board away from static electricity .

4.Keep the Board away from water and other liquid.

5.Don’t use long connect wires which may affect performance and image quality.